FGS – Federal Globe™ Small Housing Scale

TYPE | RESET

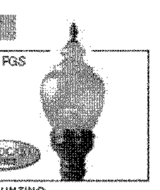

- Two fitter designs to accommodate architectural requirements
- Available with choice of three different optical systems, including patented ContraCline®, internal and external Refractors and Bare Lamp
- Energy efficient light sources range from LED to 100MH up to 400PSMH, including induction lamp system
- Cut off shield available to reduce uplight
- Integrated hinged capital offers tool-less access to lamp and ballast compartments
- Replaces the Pedestrian ContraCline® families
- IP66 rated (SAL) IP65 rated (all others)
- Powder coat finish in 13 standard colors with a polymer primer sealer

1. LUMINAIRE | 2. DECORATIVE STYLE | 3. GLOBE STYLE | 4. OPTIC STYLE | 5. LAMP/BALLAST | 6. COLOR | 7. OPTIONS | 8. MOUNTING

1. LUMINAIRE
☐ RGS (Small Scale Housing – LED)
☐ FGS (Small Scale Housing)

2. DECORATIVE STYLE
☐ RB (Rib Fitter Design) ☐ LF (Leaf Fitter Design)

3. GLOBE STYLE
UNOVA® LENS GLOBE
☐ LL3 (Type 3) ☐ LL5 (Type 5)
STANDARD ACORN GLOBE
☐ SAL (Use plexiglass, Available with LED)

4. OPTICAL SYSTEM
TYPE 5
☐ T5 (LED only)
CONTRACLINE® OPTIC
☐ CCO
GLASS REFRACTOR OPTIC (Max 150PSMH & 150HPS)
☐ GR3 (Type 3) ☐ GR5 (Type 5)
BARE LAMP OPTIC
☐ BLO

5. LAMP/BALLAST
LED
☐ 36LED–BW
METAL HALIDE
☐ 50MH ☐ 70MH ☐ 100MH
PULSE START METAL HALIDE
☐ 100PSMH
HIGH PRESSURE SODIUM
☐ 50HPS ☐ 70HPS ☐ 100HPS
☐ 150HPS
INDUCTION LAMP
☐ IL55 (55 watts) ☐ IL85 (85 watts)

6. COLOR
☐ AWT (Arctic White) ☐ CRT (Corten)
☐ BLK (Black) ☐ MAL (Matte Aluminum)
☐ MTB (Matte Black) ☐ MDG (Meadow Gray)
☐ DGN (Dark Green) ☐ ATG (Antique Green)
☐ DBZ (Dark Bronze) ☐ LGY (Light Gray)
☐ WRZ (Weathered Bronze) ☐ RAL/PREMIUM COLOR (Provide RAL)
☐ BRM (Metallic Bronze) ☐ CUSTOM COLOR
☐ VBL (Verde Blue)

7. OPTIONS
☐ FS1 (Single Fuse Holder)
☐ FS2 (Double Fuse Holder)
☐ 347 (347 volt ballast)
☐ ASY (Asymmetric reflector)
☐ HSS (House side shield)
☐ TA3
☐ TA23
☐ ADS
☐ ALF
☐ COS
☐ PHC (Photo-control kit)

8. MOUNTING
WALL MOUNT
☐ WMA 1M ☐ WMA 1L
☐ WMA 56 ☐ WMA 56
☐ WMA 57
POLE MOUNT
☐ TRA 1M ☐ TRA 1L
☐ TRA 56 ☐ TRA 56
☐ TRA 57

Visit www.aal.net for Arms, Poles & Accessories Specification Guide

SPECIFICATIONS

HOUSING
Decorative, cast aluminum fitter shall support the lamp base, reflector assembly and luminaire housing. The slip fitter shall slip over a 4"/100mm O.D. pole, and secure with four 5/16-18 stainless steel set screws. Lamp and ballast compartments shall be tool-lessly accessible through a hinged capital. The ballast is accessible by lifting ballast plate by handle.

ELECTRICAL
Fixture shall be E.T.L approved for use in outdoor wet locations. Ballast shall be high power factor multi-tap style. Sockets shall be pulse rated porcelain. The electrical assembly shall be factory wired and installed in the fixture. Quick electrical disconnects shall be provided as standard.

OPTICAL SYSTEMS
The ContraCline® optical system is a multi-faceted reflector assembly composed of four reflective elements for Type 5 or six reflector elements for Type 3. Peak candela shall be at 70° and sharp cutoff at 80°. Lamp (by others) shall be in a vertical, base down burn position.

Other optical systems available consist of an internal glass refractor optic, which features a GR3 for Type 3 light distribution and GR5 for the Type 5 light distribution, external refracting ribs in non-yellowing acrylic, as well as a bare lamp optic.

See next page

| CLEAR |

JOB ______
TYPE ______
NOTES ______

ARCHITECTURAL AREA LIGHTING
16555 East Gale Ave. | City of Industry | CA 91745
P 626.968.5666 | F 626.369.2695 | www.aal.net
Copyright© 2012 | REV 6.12

| 1 |

DECORATIVE POLE MOUNTED LIGHTING FIXTURE
N.T.S.

DB3 – Decorative Pole

TYPE | RESET

4" & 5" ROUND (RD) & FLUTED (FL) DECORATIVE BASE

1. BASE	2. POLE	3. OAH	4. COLOR	5. OPTIONS/ACCESSORIES
DB3	4R10-125	10 (3.1 m)		

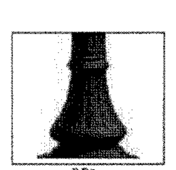

DIMENSIONS

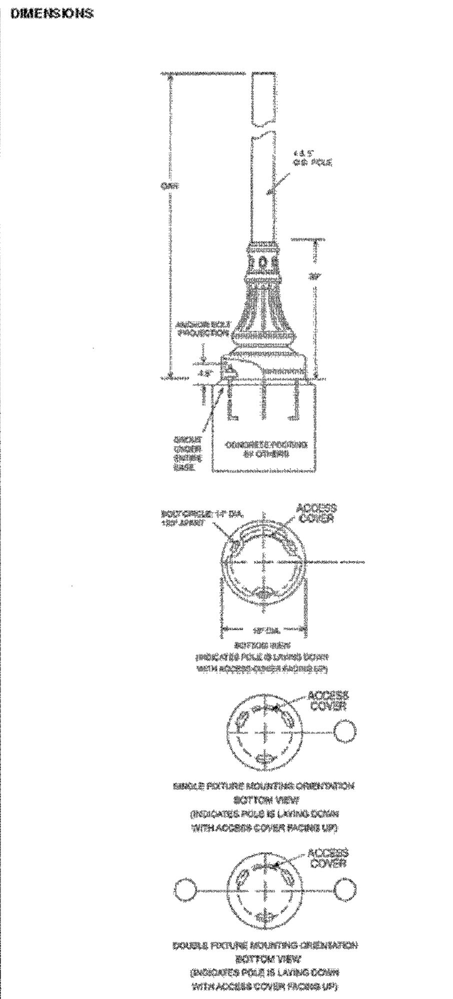

ARCHITECTURAL AREA LIGHTING
16555 East Gale Ave. | City of Industry | CA 91745
P 626.968.5666 | F 626.369.2695 | www.aal.net
Copyright© 2013 | REV 1.13

| 2 |

DECORATIVE POLE DETAIL
N.T.S.

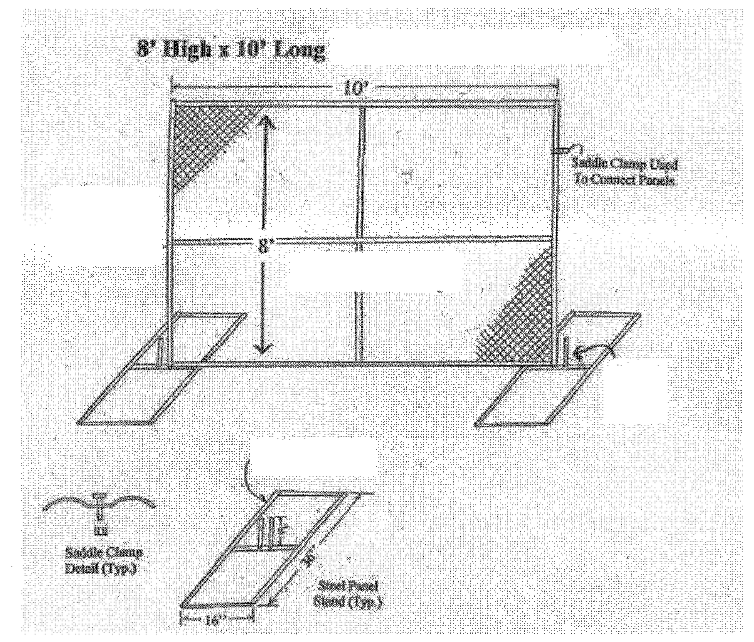

TEMPORARY CONSTRUCTION FENCE
N.T.S.

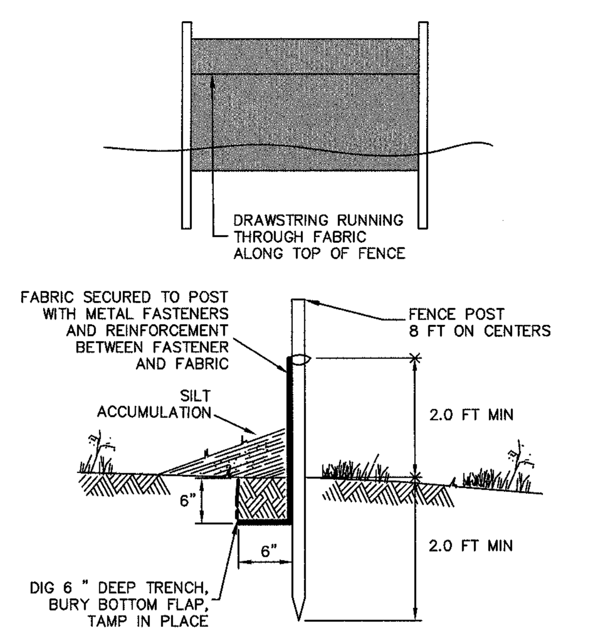

SILT FENCE DETAIL
N.T.S.

SOIL EROSION AND SEDIMENT CONTROL NOTES
(TO BE APPROVED BY THE CITY OF ENGLEWOOD DEPARTMENT OF ENGINEERING)

1. All soil erosion and sediment control practices will be installed in accordance with the Standards for Soil Erosion and Sediment Control in New Jersey (NJ Standards), and will be installed in proper sequence and maintained until permanent stabilization is established.

2. Any disturbed area that will be left exposed for more than thirty (30) days and not subject to construction traffic shall immediately receive a temporary seeding and mulching. If the season prohibits temporary seeding, the disturbed area will be mulched with salt hay or equivalent and bound in accordance with the NJ Standards (i.e., peg and twine, mulch netting, or liquid mulch binder).

3. Immediately following initial disturbance or rough grading, all critical areas subject to erosion will receive a temporary seeding in combination with straw mulch or a suitable equivalent, at a rate of 2 tons per acre, according to the NJ Standards.

4. Stabilization Specifications:
A. Temporary Seeding and Mulching:
–Lime – 90 lbs./1,000 sf ground limestone; Fertilizer – 11 lbs./1,000 sf,
10–20–10 or equivalent worked into the soil a minimum of 4".
–Seed – perennial ryegrass 40 lbs./acre (1 lb./1,000sf) or other approved seeds;
plant between March 1 and May 15 or between August 15 and October 1.
–Mulch – salt hay or small grain straw at a rate of 70 to 90 lbs./1,000 sf to be applied according to the NJ Standards. Mulch shall be secured by approved methods (i.e. peg and twine, mulch netting, or liquid mulch binder).

B. Permanent Seeding and Mulching:
–Topsoil – uniform application to a depth of 6".
–Lime – 90 lbs./1,000 sf ground limestone; Fertilizer – 11 lbs./1,000 sf,
10–20–10 or equivalent worked into the soil a minimum of 4".
–Seed – Turf type tall fescue (blend of 3 cultivars) 150 lbs./acre (3.5 lbs./1,000 sf) or other approved seeds; plant between March 1 and October 15.
–Mulch – salt hay or small grain straw at a rate of 70 to 90 lbs./1000 sf to be applied according to the NJ Standards. Mulch shall be secured by approved methods (i.e. peg and twine, mulch netting, or liquid mulch binder).

5. The site shall at all times be graded and maintained such that all stormwater running is diverted to soil erosion and sediment control facilities.

6. Soil erosion and sediment control measures will be inspected and maintained on a regular basis, including after every storm event.

7. Stockpiles are not to be located within 50' of a floodplain, slope, roadway or drainage facility. The base of all stockpiles shall be contained by a haybale sediment barrier or silt fence.

8. A crushed stone, vehicle wheel-cleaning blanket will be installed wherever a construction access road intersects any paved roadway. Said blanket will be composed of 1" – 2 1/2" crushed stone, 6" thick, will be at least 30' x 100' and should be underlain with a suitable synthetic sediment filter fabric and maintained.

9. Maximum side slopes of all exposed surfaces shall not exceed 3:1 unless otherwise approved by the District.

10. Driveways must be stabilized with 1" – 2 1/2" crushed stone or subbase prior to individual lot construction.

11. All soil washed, dropped, spilled or tracked outside the limit of disturbance or onto public right of ways, will be removed immediately. Paved roadways must be kept clean at all times.

12. Catch basin inlets will be protected with an inlet filter designed in accordance with Section 30–1 of the NJ Standards.

13. Storm drainage outlets will be stabilized, as required, before the discharge points become operational.

14. Dewatering operations must discharge directly into a sediment control bag or other approved filter in accordance with Section 14–1 of the NJ Standards.

15. Dust shall be controlled via the application of water, calcium chloride or other approved method in accordance with Section 16–1 of the NJ Standards.

16. Trees to remain after construction are to be protected with a suitable fence installed at the drip line or beyond in accordance with Section 9–1 of the NJ Standards.

17. The project owner shall be responsible for any erosion or sedimentation that may occur below stormwater outfalls or off-site as a result of construction of the project.

18. Any revision to the certified Soil Erosion and Sediment Control Plan must be submitted to the district for review and approval prior to implementation in the field.

19. A copy of the certified Soil Erosion and Sediment Control Plan must be available at the project site throughout construction.

20. The City of Englewood must be notified, in writing, at least 72 hours prior to any land disturbance: City of Englewood Department of Engineering, 9 East Street, Englewood, NJ 07631 Tel: 201–569–7590.

21. The City of Englewood may request additional measures to minimize on or off-site erosion problems during construction.

22. The owner must obtain a District issued report of compliance prior to the issuance of any certificate of occupancy. The District requires at least one week's notice to facilitate the scheduling of all report of compliance inspection. All site work must be completed, including temporary/permanent stabilization of all exposed areas, prior to the issuance of a report of compliance by the District.

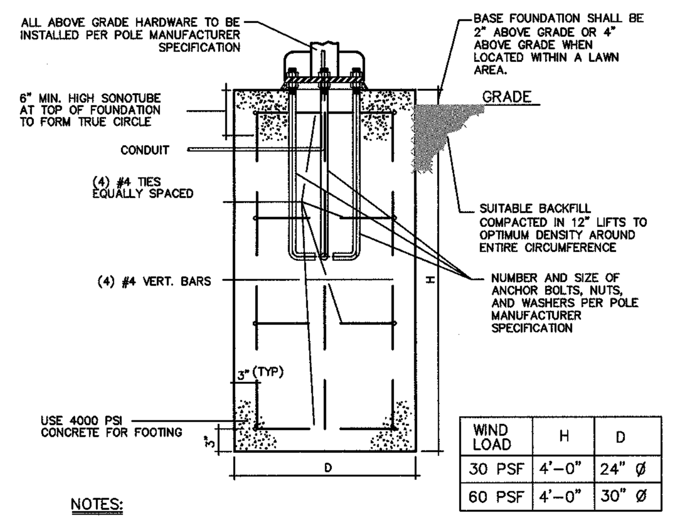

WIND LOAD	H	D
30 PSF	4'–0"	24" Ø
60 PSF	4'–0"	30" Ø

NOTES:

1. DEPTH OF FOOTING TO EXTEND BELOW FROST LINE (TYP).
2. SUITABLE COMPACTED SUBGRADE WITH MINIMUM BEARING CAPACITY OF 2,000 PSF. SOIL CONDITION & BEARING CAPACITY TO BE VERIFIED IN FIELD.
3. REINFORCING STEEL BARS SHALL BE A MINIMUM ASTM A615, GRADE 60 AND SHALL BE FIELD WIRED IN PLACE.
4. IF POLE IS WITHIN PARKING LOT OR WITHIN 2'–9" OF CURB, CONC. BASE FOUNDATION TO EXTEND 30" ABOVE GRADE, WITH RESULTING ADJUSTMENTS TO POLE HEIGHT AND REINFORCEMENT.

CONCRETE FOOTING
N.T.S.

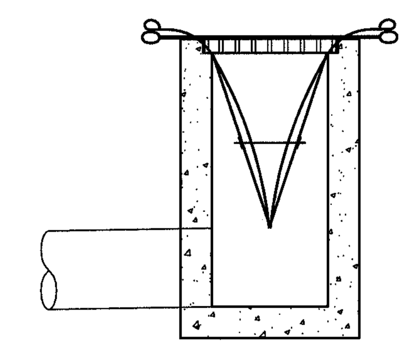

INSTALLATION DETAIL

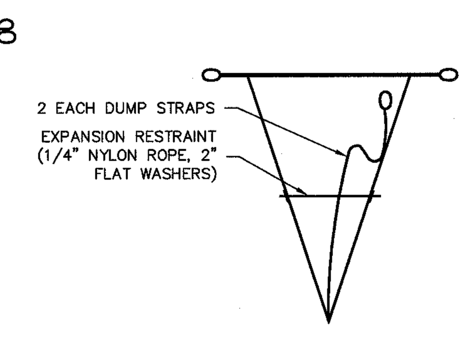

BAG DETAIL

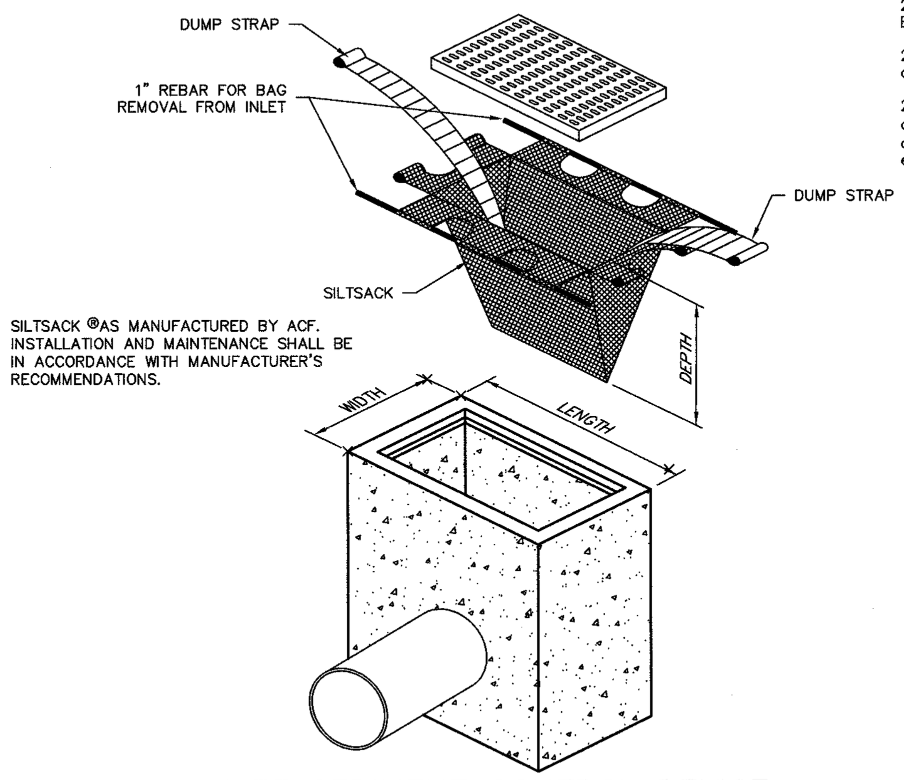

SILTSACK ®AS MANUFACTURED BY ACF. INSTALLATION AND MAINTENANCE SHALL BE IN ACCORDANCE WITH MANUFACTURER'S RECOMMENDATIONS.

INLET SEDIMENT CONTROL DEVICE
NOT TO SCALE

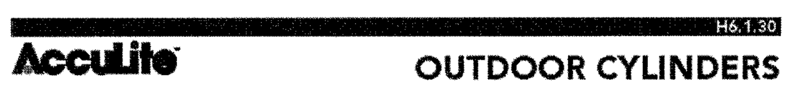

OUTDOOR CYLINDERS
COS AND COU SERIES
DOWN OR UP OPTICS
LED 22W, 35W OR 45W

Project: ______
Fixture Type: ______
Location: ______
Contact/Phone: ______ Cat. No.: ______

PRODUCT DESCRIPTION
AccuLite COS and COU Decorative cylinders are ideal for accent lighting on building façades or security lighting. Available in either down light (COS) or up light (COU) configurations. The LED light source delivers energy efficiency with minimal maintenance costs. AccuLite LED engines have a 5 year limited warranty.

PRODUCT SPECIFICATIONS
Optics LED source with accent lighting distribution down (COS) or up (COU) • Unique hyperbolic curved reflector reduces lamp image and glare while providing smoother light distribution.
Construction Heavy duty extruded aluminum barrel • Die cast aluminum cover, lens frame, ballast housing and ballast tray • Hinge down driver tray for easy installation • Borosilicate glass lens
LED Thermal Management COS and COU luminaires are equipped with a die cast aluminum heat sink that removes the heat from the critical LED components. This reduces LED operating temperature and increases LED life.
Electrical The luminaire is equipped with one LED module • All versions are equipped with universal voltage LED drivers (120-277VAC input • Total Harmonic Distortion (THD) 20% Max • Power factor > 90% at full load, 115VAC, 230VAC • A 10kAmp surge suppressor is standard.

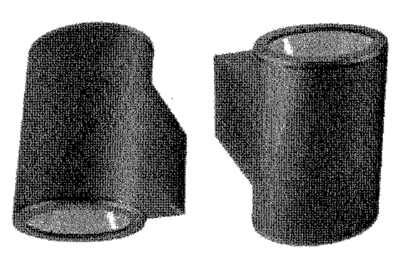

Finish Polyester powder coat finish • Bronze, black or white.
Certification Fixture meets UL1598 and CSA C22.2-250 standards • Suitable for wet location applications • Full cut-off (COS only) • Union made • Assembled in the USA.
Specifications subject to change without notice.

ELECTRICAL DATA

Engine Code	A017	A026	A032
Line Voltage	120V	120V	120V
Input Power	22W	35W	45W
Input Current	0.2A	0.3A	0.4A
Power Factor	0.993	0.993	0.993
Frequency	50/60Hz	50/60Hz	50/60Hz
Minimum Starting Temperature	-22°F (-30°C)	-22°F (-30°C)	-22°F (-30°C)

DIMENSIONS

	Weight	W	H	D
Downlighting	18 lb.	9 1/4"	13 3/8"	15"

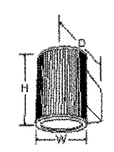

LED DATA

Engine Code	Typical System Watts	Nominal CCT	Typical CRI	Luminaire Initial Absolute Lumens
A017	22W	4000K	80	1890
A026	35W	4000K	80	2598
A032	45W	4000K	80	3418

LED LUMEN DEPRECIATION

Ambient Temperature (C)	L_{70} Hours
25°C	50,000

2/13

BUILDING MOUNTED LIGHTING FIXTURE
N.T.S.

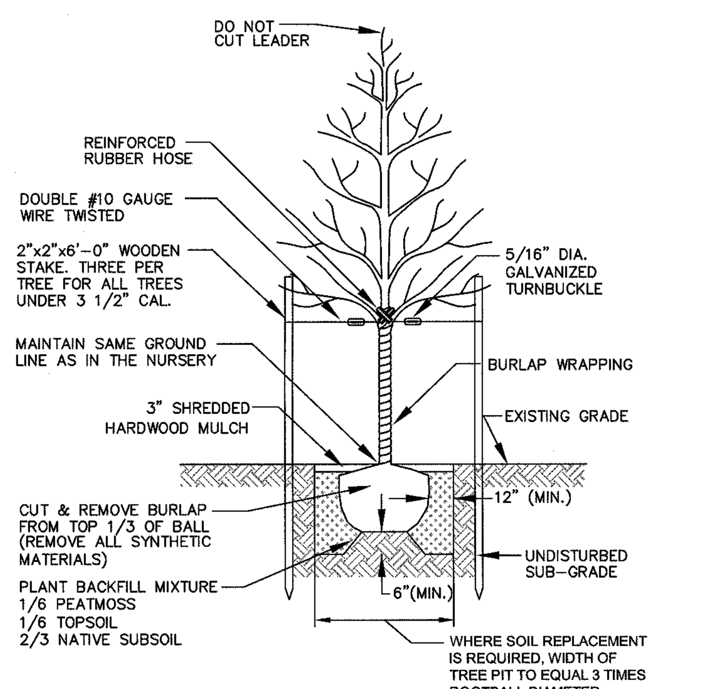

DECIDUOUS TREE PLANTING DETAIL
N.T.S.

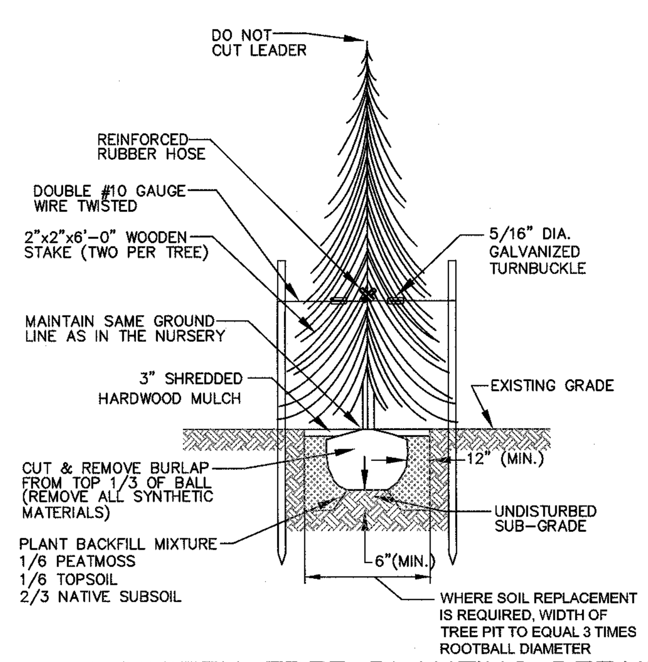

EVERGREEN TREE PLANTING DETAIL
N.T.S.

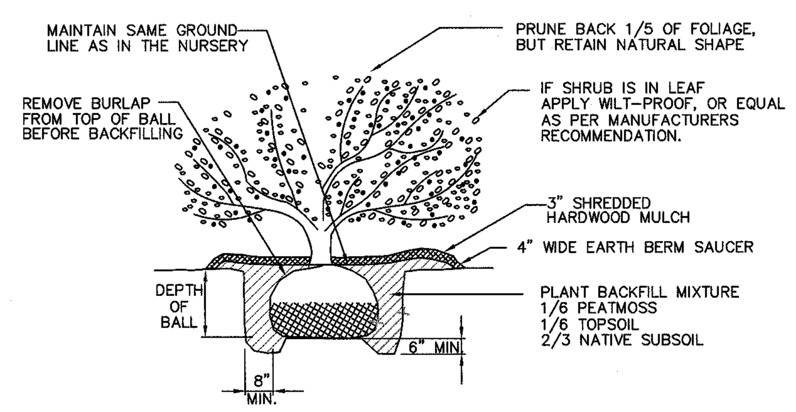

SHRUB PLANTING DETAIL
N.T.S.

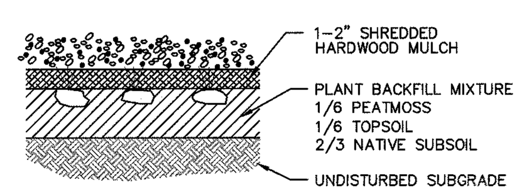

PERENNIAL/GROUNDCOVER PLANTING DETAIL
N.T.S.

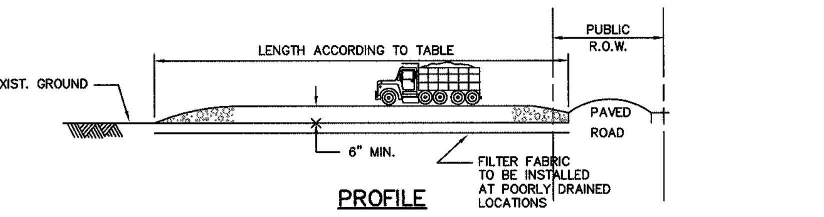

PROFILE

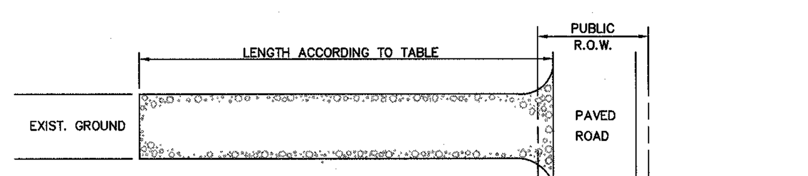

PLAN

NOTES

STONE SIZE 1 1/2" – 2 1/2" CRUSHED STONE

WIDTH NOT LESS THAN FULL WIDTH AT POINTS OF EGRESS AND INGRESS.

WASHING: WHEN NECESSARY, WHEELS SHALL BE CLEANED TO REMOVE SEDIMENT PRIOR TO ENTRANCE ONTO PUBLIC R.O.W. WHEN WASHING IS REQUIRED, IT SHALL BE DONE ON AN AREA STABILIZED WITH CRUSHED STONE WHICH DRAINS INTO AN APPROVED SEDIMENT BASIN.

MAINTENANCE – THE ENTRANCE SHALL BE MAINTAINED IN A CONDITION WHICH WILL PREVENT TRACKING OR FLOWING OF SEDIMENT ONTO PUBLIC R.O.W. THIS MAY REQUIRE PERIODIC TOP DRESSING WITH ADDITIONAL STONE AS CONDITIONS DEMAND AND REPAIR AND/OR CLEANOUT OF ANY MEASURES USED TO TRAP SEDIMENT. ALL SEDIMENT SPILLED, DROPPED, WASHED, OR TRAPPED ONTO PUBLIC R.O.W. MUST BE REMOVED IMMEDIATELY.

WHEN THE CONSTRUCTION ACCESS EXITS ONTO A MAJOR ROADWAY, A PAVED TRANSITION AREA MAY BE INSTALLED BETWEEN THE MAJOR ROADWAY AND THE STONED ENTRANCE TO PREVENT LOOSE STONES FROM BEING TRANSPORTED OUT ONTO THE ROADWAY BY HEAVY EQUIPMENT ENTERING OR LEAVING THE SITE.

PERCENT SLOPE OF ROADWAY	LENGTH OF STONE REQUIRED	
	COARSE GRAINED SOILS	FINE GRAINED SOILS
0 TO 2%	50 ft.	100ft.
2 TO 5%	100ft.	200ft.
>5%	ENTIRE SURFACE STABILIZED WITH HMA BASE COURSE MIX I–2[1]	

1. AS PRESCRIBED BY LOCAL ORDINANCE OR OTHER GOVERNING AUTHORITY

STABILIZED CONSTRUCTION ENTRANCE
N.T.S

STANDARD FOR DUST CONTROL (Per Standards... Dust Control 16–1, May 2012)

DEFINITION–The control of dust on construction sites and roads.

PURPOSE– To prevent blowing and movement of dust from exposed soil surfaces, reduce on and off-site damage and health hazards, and improve traffic safety.

CONDITION WHERE PRACTICE APPLIES– This practice is applicable to areas subject to dust blowing and movement where on– and off–site damage is likely without treatment. Consult with local municipal ordinances on any restrictions.

WATER QUALITY ENHANCEMENT–Sediments deposited as "dust" are often fine colloidal material which is extremely difficult to remove from water once it becomes suspended. Use of this standard will help to control the generation of dust from construction sites and subsequent blowing and deposition into local surface water resources.

PLANNING CRITERIA– The following methods should be considered for controlling dust:

Mulches–See Standards for Stabilization with mulches Only (p. 5–1)

Vegetative Cover–See Standards for Temporary Vegetative Cover (p. 7–1), Permanent Vegetative Cover for Soil Stabilization (p. 4–1) and Permanent Stabilization with Sod (p. 6–1)

Spray–on Adhesives–On mineral soils (not effective on muck soils). Keep traffic off these areas.

Table 16–1: Dust Control Materials:

	Water Dilution	Type of Nozzle	Gal./Acre
Anionic asphalt emulsion	7:1	Coarse Spray	1,200
Latex Emulsion	12.5:1	Fine Spray	235
Resin in Water	4:1	Fine Spray	300
Polyacrylamide (PAM) – spray on Polyacrylamide (PAM) – dry spray	Apply according to manufacturer's instructions. May also be used as an additive to sediment basins to flocculate and precipitate suspended colloids. See Sediment Basin standard (pg 26–1).		
Acidulated Soy Bean Soap Stick	None	Coarse Spray	1,200

Tillage: To roughen surface and bring clods to the surface. This is a temporary emergency measure which should be used before soil blowing starts. Begin plowing on windward side of site. Chisel–type plows spaced about 12 inches apart, and spring–toothed harrows are examples of equipment which may produce the desired effect.

Sprinkling: Site is sprinkled until the surface is wet.

Barriers: Solid board fences, snow fences, burlap fences, crate walls, bales of hay, and similar material can be used to control air currents and soil blowing.

Calcium Chloride: Shall be in the form of loose, dry granules of flakes fine enough to feed through commonly used spreaders at a rate that will keep surface moist but not cause pollution or plant damage. If used on steeper slopes, then use other practices to prevent washing into streams or accumulation around plants.

Stone: Cover surface with crushed stone or coarse gravel.

CONSTRUCTION SEQUENCE

1.	INSTALL SOIL EROSION AND SEDIMENT CONTROL DEVICES. THIS INSTALLATION INCLUDES PLACEMENT OF STABILIZED CONSTRUCTION ENTRANCE, PERIMETER SILT FENCE, INLET FILTER PROTECTION AT EXISTING INLETS AND OTHER PROTECTION NECESSARY PER SESC PLAN.	1 DAY
2.	INSTALL UNDERGROUND UTILITIES	3 WEEKS
3.	CONSTRUCT CURBING	3 WEEKS
4.	TEMPORARY SEED ALL AREAS TO BE LEFT EXPOSED FOR MORE THAN 30 DAYS	1 DAY
5.	CONSTRUCT DRIVEWAYS AND PARKING LOTS, APPLY SUBBASE MATERIAL	3 WEEKS
6.	CONSTRUCT BUILDINGS.	12 MONTHS
7.	FINAL GRADE AROUND BUILDINGS	2 WEEKS
8.	INSTALL LIGHTING AND LANDSCAPING	3 WEEKS
9.	PERMANENT SEED ALL AREAS	2 WEEKS
10.	POUR CONCRETE SURFACE COURSE IN PARKING LOT & SIDEWALKS	3 DAYS
11.	INSTALL PAVEMENT MARKINGS	2 DAYS
12.	REMOVE SOIL EROSION CONTROL DEVICES WHEN SITE IS STABILIZED	1 DAY
	TOTAL DURATION	18 MONTHS

SEE SHEET 2 OF THIS SET FOR GENERAL NOTES AND REFERENCES.

6			12			
5			11			
4			10			
3			9			
2	90% CONSTRUCTION SET	09/04/15	8			
1	PER CITY ENGINEER COMMENTS DATED 9/25/14	10/17/14	7			

REVISIONS

DATE: 09/12/14 CHKD.
OEA#: 131210.C0
PROJ.: 080247-C0-001

THIS DRAWING AND ALL INFORMATION CONTAINED HEREIN IS AUTHORIZED FOR USE ONLY BY THE PARTY FOR WHOM THE WORK WAS CONTRACTED OR TO WHOM IT IS CERTIFIED. THIS DRAWING MAY NOT BE COPIED, REUSED, DISCLOSED, DISTRIBUTED OR RELIED UPON FOR ANY OTHER PURPOSE WITHOUT THE WRITTEN CONSENT OF OMLAND ENGINEERING ASSOCIATES, INC. COPYRIGHT 2015 OMLAND ENGINEERING ASSOCIATES, INC. ALL RIGHTS RESERVED

OMLAND
ENGINEERING ASSOCIATES, INC.
a Bowman Consulting Company
54 Horsehill Road, Suite 100
Cedar Knolls, New Jersey 07927
Phone: 973-359-8400
FAX: 973-359-8455
E-mail: oea@omland.com
NJ Certificate of Authorization
No. 24GA28222600
CHARLES THOMAS Jr. N.J. Professional Engineer Lic. 24GE03924400
DAVID B. DIXON, N.J. Professional Land Surveyor Lic. 24GS02728200

PLANS ARE FINAL FOR SANITARY SEWER DESIGN

PRELIMINARY AND FINAL SITE PLAN FOR
ENGLEWOOD REDEVELOPMENT
CONSTRUCTION DETAILS
BLOCK 2305, LOTS 12 & 13
CITY OF ENGLEWOOD, BERGEN COUNTY, NEW JERSEY